SYMBOL	DESCRIPTION
[K]	*KEY DIMENSION*
[C]	*CRITICAL DIMENSION*

REVISION TABLE				
REV.	DATE	ECN	DESCRIPTION OF CHANGE	BY
A	04/11/2019	0678	DRAWING CREATED	EAH

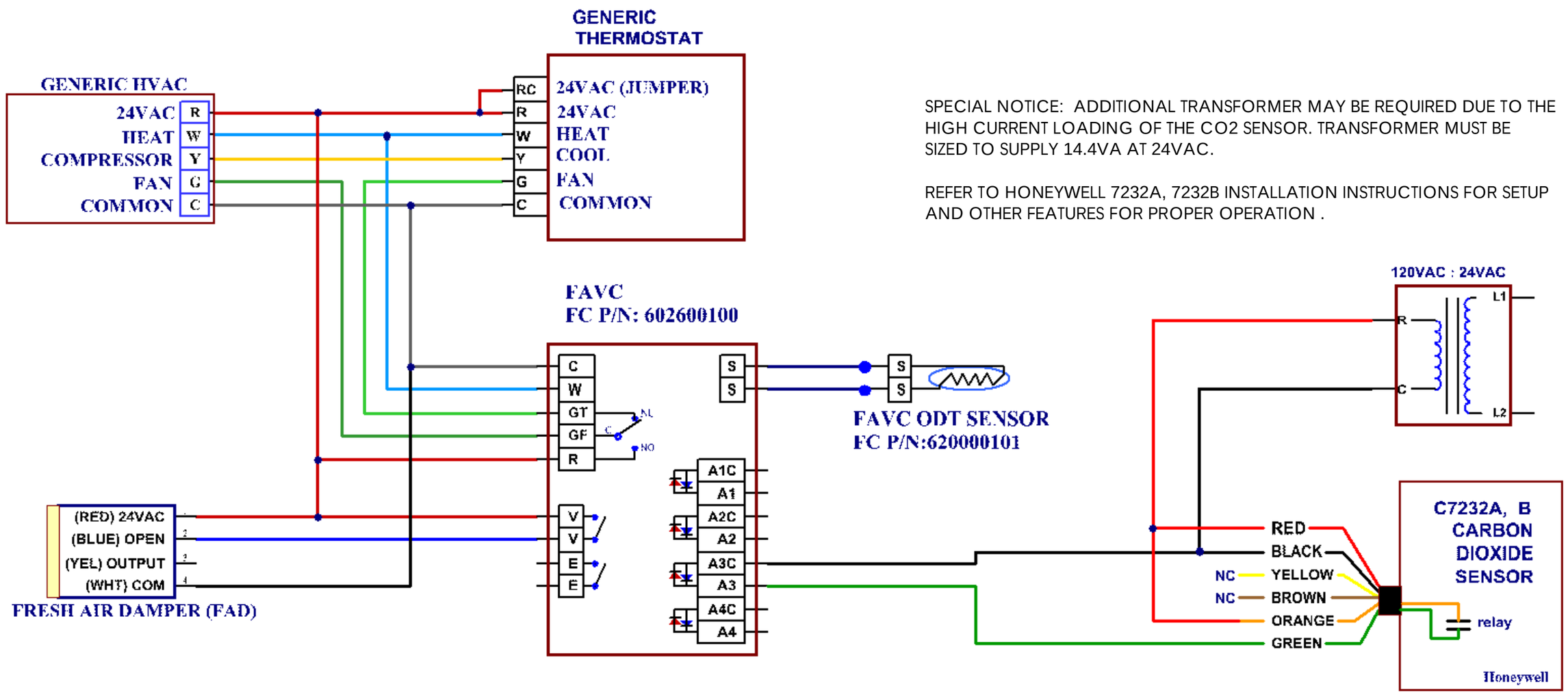

SPECIAL NOTICE: ADDITIONAL TRANSFORMER MAY BE REQUIRED DUE TO THE HIGH CURRENT LOADING OF THE CO2 SENSOR. TRANSFORMER MUST BE SIZED TO SUPPLY 14.4VA AT 24VAC.

REFER TO HONEYWELL 7232A, 7232B INSTALLATION INSTRUCTIONS FOR SETUP AND OTHER FEATURES FOR PROPER OPERATION .

REQUIREMENTS FOR FAVC:
THE CARBON DIOXIDE SENSOR WILL FORCE VENTILATION WITH CENTRAL FAN ACTIVITY,
THE APPLIANCE #3 WAS CHOSEN TO DEMONSTRATE WITH WIRING FOR THE SENSOR. IN ORDER TO PROVIDE CENTRAL FAN ACTIVITY WITH APPLIANCE #3, THE CONFIGURE SWITCH (SW1) POSITION 3 MUST BE SET TO ON. ADJUST THE CFM FLOW RATE VALUE ON APPLIANCE #3 TO MATCH THE HEAT OR COOL VENTILATION SETTING (CHOOSE THE LOWEST VALUE OF THE TWO).

PLEASE NOTE: APPLIANCE #'S 1 AND 2 WILL NOT OPERATE THE CENTRAL FAN. APPLIANCE #3 OR APPLIANCE #4 ARE THE ONLY INPUTS THAT WILL CONTROL THE CENTRAL FAN AND VENTILATION OUTPUTS.

FIELD CONTROLS
KINSTON, N.C
28504
USA

TOLERANCE (UNLESS NOTED)	
FRACTIONAL:	Ñ 1/32
ANGLES:	Ñ 2Á
X.X DECIMAL:	Ñ 0.050
X.XX DECIMAL:	Ñ 0.010
X.XXX DECIMAL:	Ñ 0.005

DESCRIPTION: FAVC WIRE DIAGRAM FOR USE WITH CARBON DIOXIDE SENSOR H.W. 7232A,B

ALL DIMENSIONS ARE IN INCHES UNLESS OTHERWISE SPECIFIED

P/N: 780300910 REV: A

ORIG ECO	REV ECO	SHEET	DWN BY:	DATE:	APVD BY:	DATE:
XXXX	XXXX	1:1	EAH	10/13/2017	MRL	10/13/2017

THIS DOCUMENT IS THE PROPERTY OF FIELD CONTROLS LLC AND CONTAINS PROPRIETARY AND CONFIDENTIAL INFORMATION WHICH MUST NOT BE DUPLICATED, USED OR DISCLOSED WITHOUT THE EXPRESS AUTHORIZATION OF FIELD CONTROLS LLC.

FILE NAME: 780300910.SLDDRW