SYMBOL	DESCRIPTION
[K]	*KEY DIMENSION*
[C]	*CRITICAL DIMENSION*

REVISION TABLE				
REV.	DATE	ECN	DESCRIPTION OF CHANGE	BY

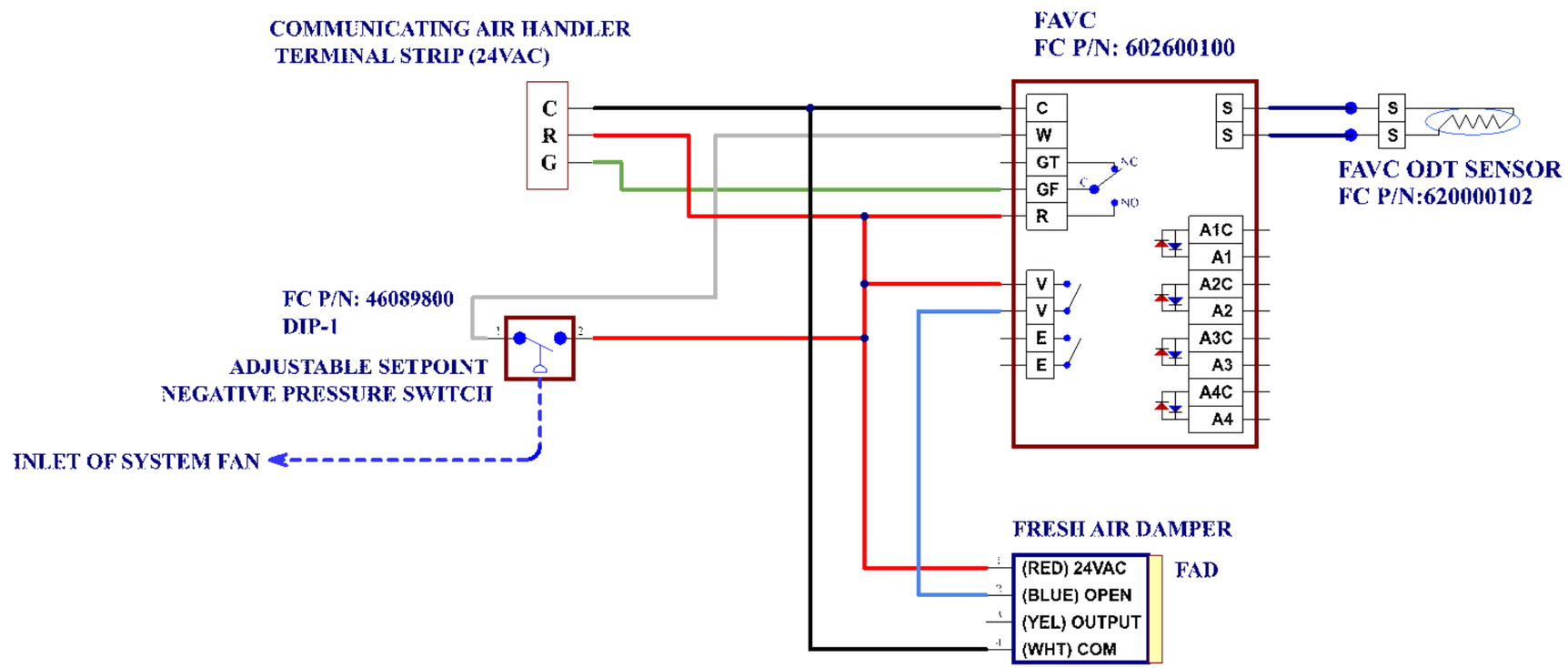

FAVC control can be used with some communicating systems such as the Carrier InfinityÈ System or other types of communicating thermostats and variable speed motor. Similar systems: BryantÈ EvolutionÈ, HeilÈ Observer ™ Systems, TempstarÈ, ComfortmakerÈ and Arco AireÈ.

The pressure switch to be adjusted such that when the system fan is running in a continuous low speed, the pressure switch is not making contact. When the system is running at a higher fan speed for cooling and or heating, the negative pressure in the switch will cause the contacts to close sending the 24VAC signal to the W terminal of the FAVC. Within 45 seconds the damper will open and remain open to satisfy the ventilation requirements or close when the fan speed drops below the holding pressure of the switch.

Consult with Field Controls Sales representative for details on communicating thermostat set up.

FIELD CONTROLS
KINSTON, N.C
28504
USA

TOLERANCE (UNLESS NOTED)	
FRACTIONAL:	Ñ 1/32
ANGLES:	Ñ 2Á
X.X DECIMAL:	Ñ 0.050
X.XX DECIMAL:	Ñ 0.010
X.XXX DECIMAL:	Ñ 0.005

DESCRIPTION: FAVC USED WITH COMMUNICATING SYSTEM WITH VARIABLE SPEED FAN MOTORS

ALL DIMENSIONS ARE IN INCHES UNLESS OTHERWISE SPECIFIED

P/N:	REV:
780300916	A

ORIG ECN	REV ECN	SHEET	DWN BY:	DATE:	APVD BY:	DATE:
0440	-	1:1	EAH	11/13/2018	MRL	11/13/2018

THIS DOCUMENT IS THE PROPERTY OF FIELD CONTROLS LLC AND CONTAINS PROPRIETARY AND CONFIDENTIAL INFORMATION WHICH MUST NOT BE DUPLICATED, USED OR DISCLOSED WITHOUT THE EXPRESS AUTHORIZATION OF FIELD CONTROLS LLC.

FILE NAME: 780300916.SLDDRW