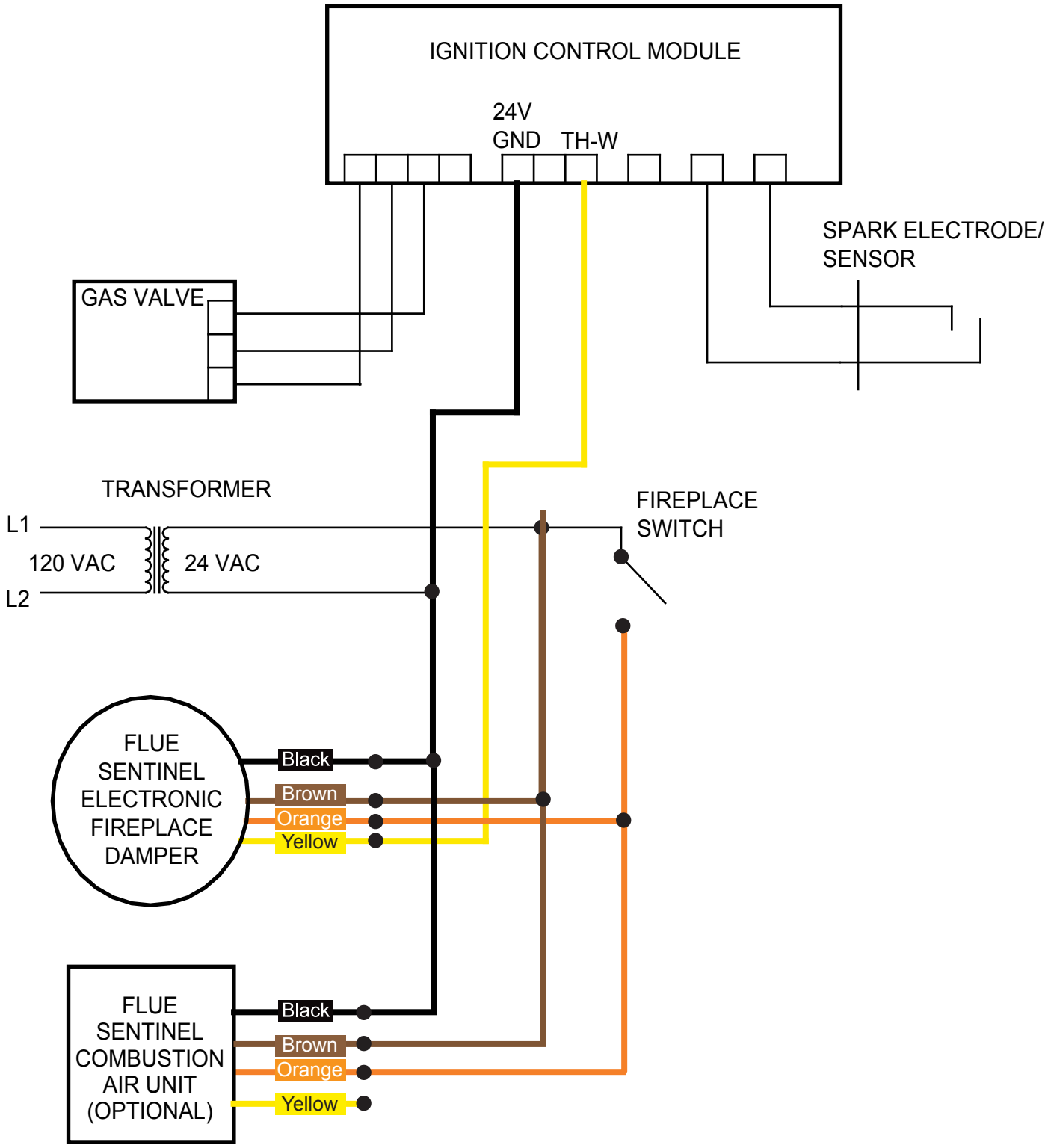
IGNITION CONTROL MODULE
24V
GND
TH-W
SPARK ELECTRODE/
SENSOR
GAS VALVE
TRANSFORMER
L1
120 VAC
24 VAC
L2
FIREPLACE
SWITCH
FLUE
SENTINEL
ELECTRONIC
FIREPLACE
DAMPER
Black
Brown
Orange
Yellow
FLUE
SENTINEL
COMBUSTION
AIR UNIT
(OPTIONAL)
Black
Brown
Orange
Yellow