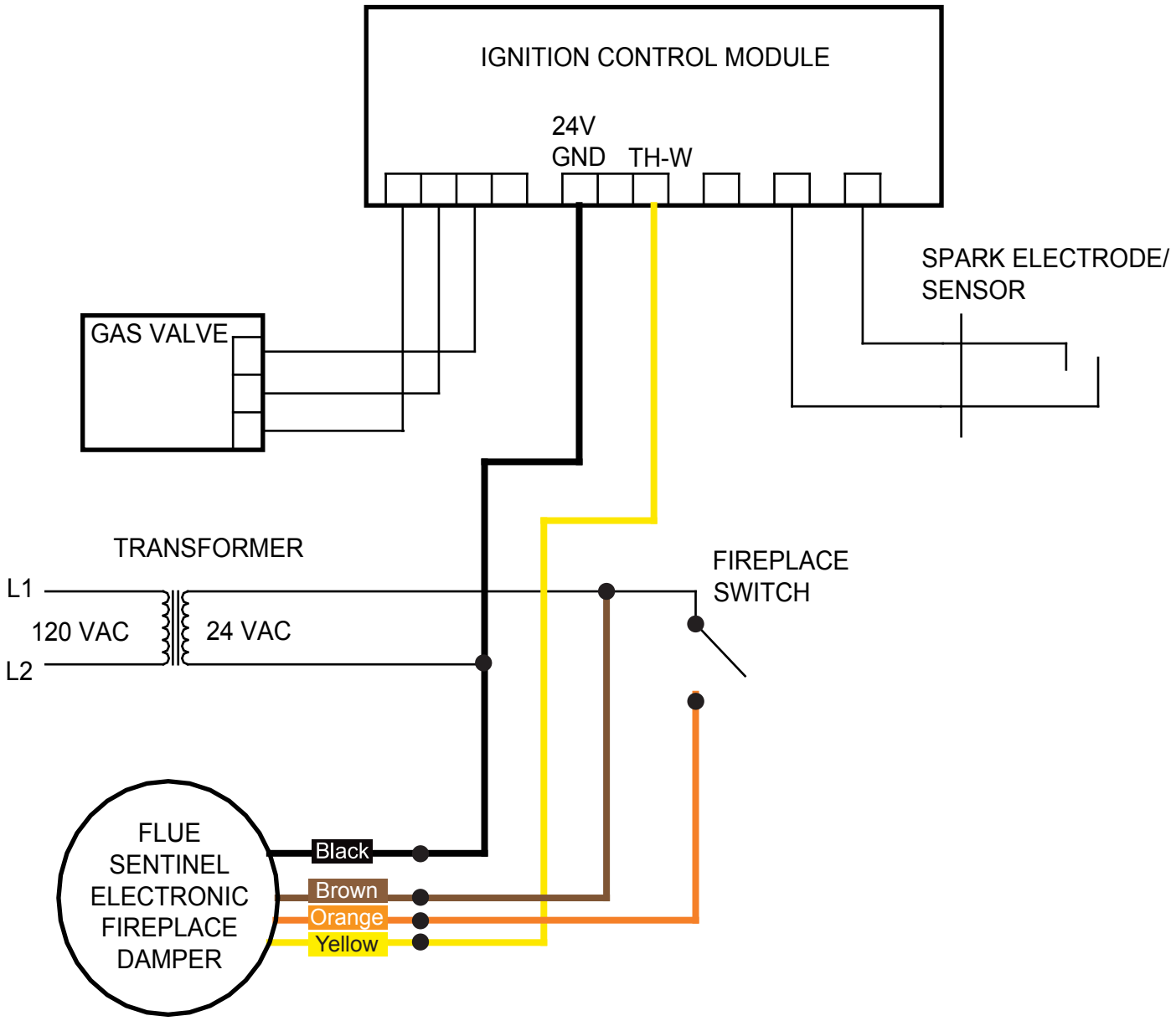
IGNITION CONTROL MODULE
24V
GND
TH-W
SPARK ELECTRODE/
SENSOR
GAS VALVE
TRANSFORMER
L1
120 VAC
24 VAC
L2
FIREPLACE
SWITCH
FLUE
SENTINEL
ELECTRONIC
FIREPLACE
DAMPER
Black
Brown
Orange
Yellow